ENGINEERING
TOMORROW

Data sheet

SEM-SAFE® high-pressure water mist pump unit

Product version 2.0, 1 to 4 pumps and 5 to 8 pumps

SEM-SAFE® high-pressure water mist system

SEM-SAFE® is a high-pressure water mist fire fighting system that uses micro- droplets released through the nozzle into protected areas. Water is discharged in a form that ensures fire suppression, control or extinguish.
When water is forced through nozzles at high pressure, a super-fine mist is formed that has a two-fold extinguishing effect. As well as cooling the fire it simultaneously starves the fire of oxygen. This cooling effect also reduces the likelihood of re-ignition.

A SEM-SAFE® system is comprised of several SEM-SAFE® high-pressure water mist nozzles connected by stainless steel piping to a modular SEM-SAFE® high-pressure pump unit. Stainless steel SEM-SAFE® high-pressure water mist section valves are supplied with the SEM-SAFE® system in order to separate the individual fire sections.

The SEM-SAFE® pump unit can feed either automatic frangible glass bulb nozzles or open nozzles in "wet", "pre-action" or "deluge/dry" applications.

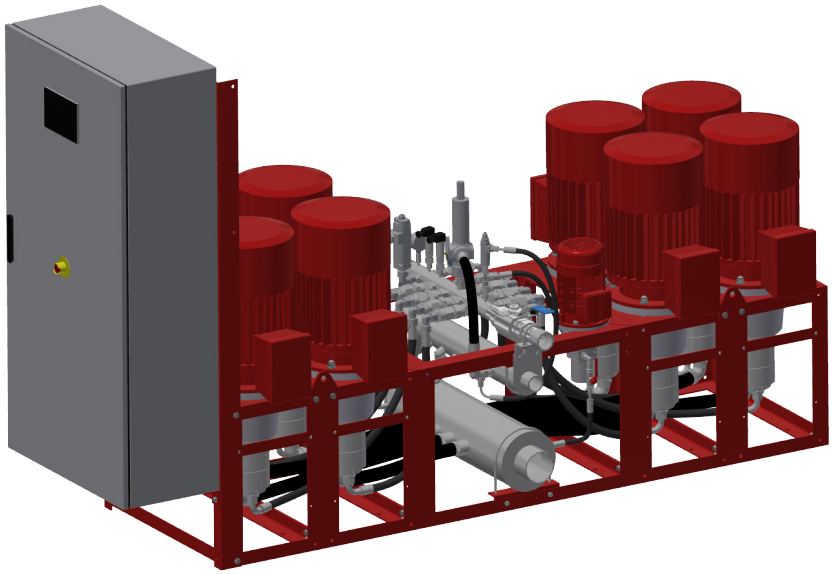

General description of high-pressure pump unit, product version 2.0, 1 to 4 pumps and 5 to 8 pumps

The pump unit is a vital part of the SEM-SAFE® high-pressure water mist system for fire fighting.
The main components are high-pressure pumps, pilot pump, electric motors, inlet- return- and high-pressure manifolds and control panel, all mounted on one skid frame.

The pump unit consists of up to 8 electrically driven high-pressure pumps. The pumps are water lubricated multi axial piston pumps, starting direct on line (DOL). It supplies fresh water at high pressure to automatic frangible glass bulb nozzles or open nozzles in "wet", "pre-action" or "deluge/dry" applications.
This is a modular, small footprint pump unit supplied with water from a separate source, i.e. public water mains, a full water storage tank or a reduced capacity tank.

Water return lines from pressure relief valves, test valve and start-up valves are collected in a common return manifold to be returned to the water storage tank or drain in one single pipe.

The pump unit operates one or more high-pressure pumps connected to the water mist pipe system to meet the system design requirements. The system is activated on pressure drop.

Should the flow demand increase due to the release of more nozzles, additional pumps will automatically start sequentially. The required pumps necessary to maintain flow and operating pressure in the system will operate. The high-pressure water mist system remains activated until authorized personnel stop the system manually.

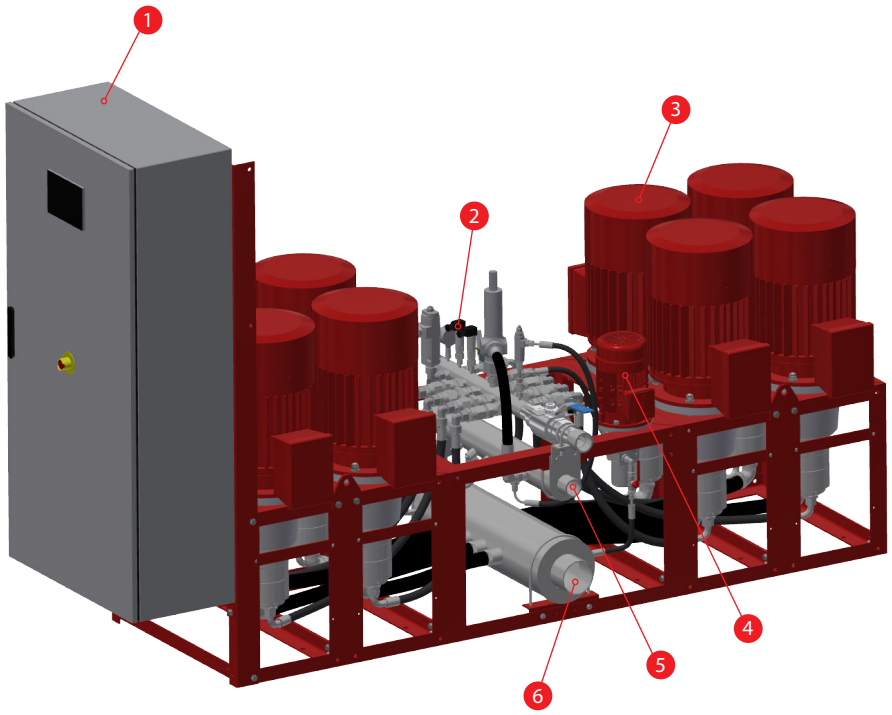

1. Unit control panel
2. High-pressure manifold assembly
3. Pump motor assembly
4. Pilot pump
5. Low-pressure outlet manifold
6. Low-pressure inlet manifold

Standards

The pump unit is designed according to the Danfoss design manual incorporating the following standards:

NFPA 750 - edition 2015
IMO - International Maritime Organisation Standards MSC 1165 + Amendments 1237, 1269, 1386 / MSC 265 + Amendments 1556 / MSC 1387 / MSC 1268
EN 12845:2015 – Fixed Fire Fighting Systems – Automatic Sprinkler Systems – Design, Installation and Maintenance
CEN TS 14972:2011 – Fixed Fire Fighting Systems – Water Mist Systems – Design and Installation
EN 12094-10
EN 12094-13
EN 60204-1:2018 - Safety of machinery - Electrical equipment of machines

© Copyright Danfoss Fire Safety A/S | 2019.06

Pump unit specification

Rated power voltage [VAC]	3 x 400 [1)]
Frequency [Hz]	50 [1)]
Ingress protection	IP 55
Ambient operating temperature	+4 to +45 °C
Storage temperature	+4 to +45 °C
Design pressure [bar]	140
Inlet pressure [bar]	0.1 to 4
High-pressure pilot pump [bar]	15-40

Pump unit item number	Max. flow [l/min]	Max. flow m^3 / hr	High-pressure pumps	Prepared for one booster pump range [Amps] [2)]	Power consumption [Amps] (Power requirement at 100% flow)	Softstarter	Motor protection type	Pump unit product code
700100	224	13.4	2	6-10	124	No	Circuit breaker t-m	HPE-20-080-30-0000-HP-U-CB
700101							Fuse	HPE-20-080-30-0000-HP-U-F
700102						Yes	Circuit breaker t-m	HPE-20-080-30-0000-HP-U-S-CB
700103							Fuse	HPE-20-080-30-0000-HP-U-S-F
700104	336	20.2	3	9-14	185	No	Circuit breaker t-m	HPE-30-080-30-0000-HP-U-CB
700105							Fuse	HPE-30-080-30-0000-HP-U-F
700106						Yes	Circuit breaker t-m	HPE-30-080-30-0000-HP-U-S-CB
700107							Fuse	HPE-30-080-30-0000-HP-U-S-F
700108	448	26.9	4	9-14	241	No	Circuit breaker t-m	HPE-40-080-30-0000-HP-U-CB
700109							Fuse	HPE-40-080-30-0000-HP-U-F
700110						Yes	Circuit breaker t-m	HPE-40-080-30-0000-HP-U-S-CB
700111							Fuse	HPE-40-080-30-0000-HP-U-S-F
700112	560	33.6	5	13-18	301	No	Circuit breaker t-m	HPE-50-080-30-0000-HP-U-CB
700113							Fuse	HPE-50-080-30-0000-HP-U-F
700114						Yes	Circuit breaker t-m	HPE-50-080-30-0000-HP-U-S-CB
700115							Fuse	HPE-50-080-30-0000-HP-U-S-F
700116	672	40.3	6	17-23	362	No	Circuit breaker t-m	HPE-60-080-30-0000-HP-U-CB
700117							Fuse	HPE-60-080-30-0000-HP-U-F
700118						Yes	Circuit breaker t-m	HPE-60-080-30-0000-HP-U-S-CB
700119							Fuse	HPE-60-080-30-0000-HP-U-S-F
700120	784	47.0	7	17-23	418	No	Circuit breaker t-m	HPE-70-080-30-0000-HP-U-CB
700121							Fuse	HPE-70-080-30-0000-HP-U-F
700122						Yes	Circuit breaker t-m	HPE-70-080-30-0000-HP-U-S-CB
700123							Fuse	HPE-70-080-30-0000-HP-U-S-F
700124	896	53.8	8	17-23	474	No	Circuit breaker t-m	HPE-80-080-30-0000-HP-U-CB
700125							Fuse	HPE-80-080-30-0000-HP-U-F
700126						Yes	Circuit breaker t-m	HPE-80-080-30-0000-HP-U-S-CB
700127							Fuse	HPE-80-080-30-0000-HP-U-S-F

1) Other voltages and frequencies avaliable on request
2) Other amp. ranges for booster pumps available on request

© Copyright Danfoss Fire Safety A/S | 2019.06

Graphical User Interface (GUI)

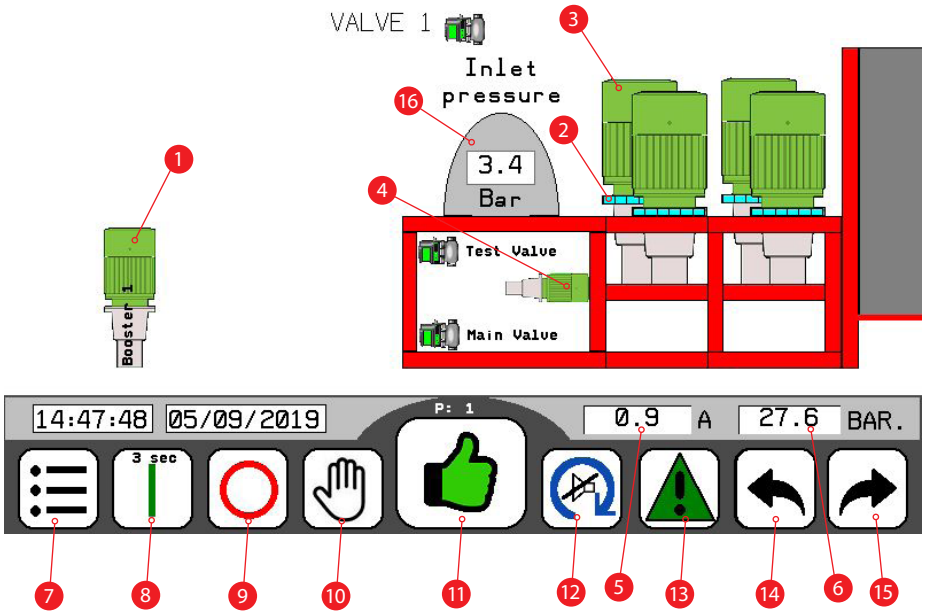

1. Booster pump status indicator
2. Space heater status indicators
3. High-pressure pump status indicators
4. Pilot pump status indicator
5. Unit power consumption
6. System pressure
7. Menu button
8. Start button
9. Stop button
10. Manual start shortcut
11. System ready indicator
12. Acknowledge alarm
13. Alarm list shortcut
14. Page navigation
15. Page navigation
16. Inlet pressure

Graphical User Interface (GUI) optional items (available on request)

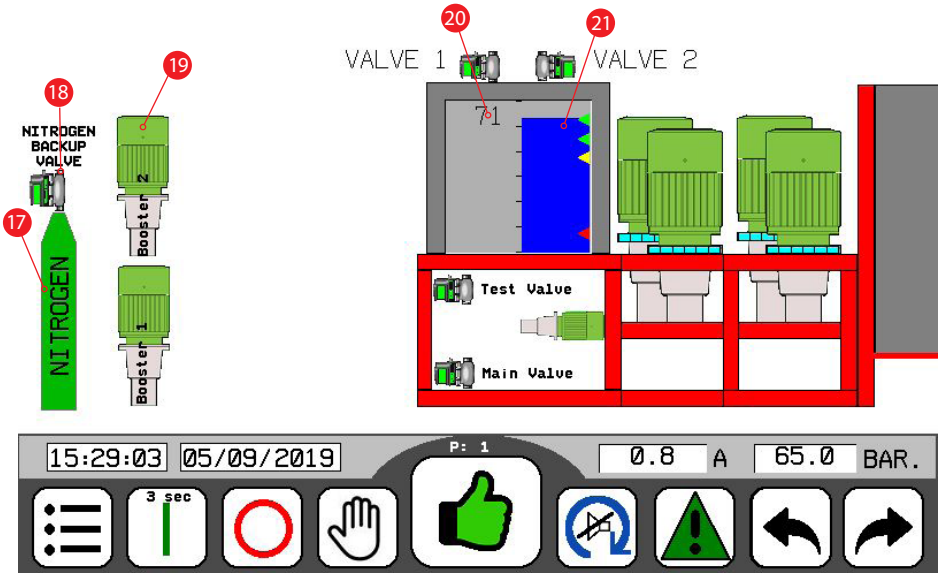

17. Nitrogen back-up cylinder
18. Nitrogen back-up valve
19. Extra booster pump
20. Tank level indicator
21. Water tank

© Copyright Danfoss Fire Safety A/S | 2019.06

Installation information

Pump unit item number	Height [mm]	Length [mm]	Width [mm]	Low-pressure inlet manifold [BSPP]	High-pressure outlet manifold [BSPP]	Low-pressure outlet manifold [BSPP]
700100	1700	1826	1040	3"	1¼"	2"
700101	1900	1826	1040	3"	1¼"	2"
700102	1900	1826	1040	3"	1¼"	2"
700103	1900	1826	1040	3"	1¼"	2"
700104	1700	2226	1040	3"	1¼"	2"
700105	1900	2226	1040	3"	1¼"	2"
700106	1900	2226	1040	3"	1¼"	2"
700107	1900	2226	1040	3"	1¼"	2"
700108	1900	2226	1040	3"	1¼"	2"
700109	1900	2226	1040	3"	1¼"	2"
700110	1900	2226	1040	3"	1¼"	2"
700111	1900	2226	1040	3"	1¼"	2"
700112	1900	2565	1040	4"	2"	2"
700113	1900	2565	1040	4"	2"	2"
700114	1900	2565	1040	4"	2"	2"
700115	1900	2565	1040	4"	2"	2"
700116	2100	2565	1040	4"	2"	2"
700117	2100	2565	1040	4"	2"	2"
700118	2100	2565	1040	4"	2"	2"
700119	2100	2565	1040	4"	2"	2"
700120	2100	2965	1040	4"	2"	2"
700121	2300	2965	1040	4"	2"	2"
700122	2300	2965	1040	4"	2"	2"
700123	2300	2965	1040	4"	2"	2"
700124	2300	2965	1040	4"	2"	2"
700125	2300	2965	1040	4"	2"	2"
700126	2300	2965	1040	4"	2"	2"
700127	2300	2965	1040	4"	2"	2"

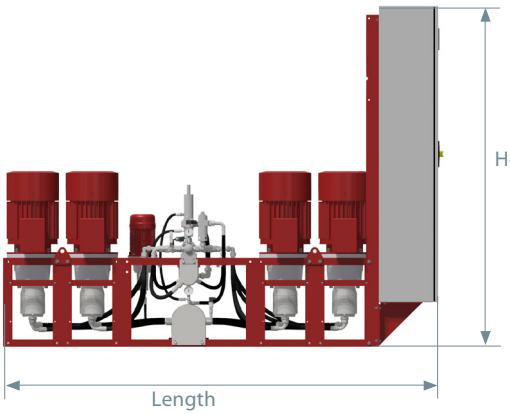

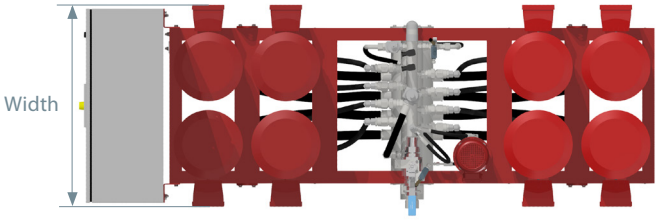

© Copyright Danfoss Fire Safety A/S | 2019.06